NEW

WITH THREE-PHASE AND SINGLE-PHASE ENERGY METERS OF **SERIES 15**

Three-phase and single-phase energy meters

Intelligently measure and visualize power

Products and prices 2019

Intelligently measure and visualize power

Our new Series 15 three-phase and single-phase energy meters offer you a range of varied and low-cost applications when requirements call for metering and visualising electrical energy consumption.

Our modern meters conforming with European standards meet very high-quality demands and feature reliable high precision metering. This very high quality is guaranteed by extreme car taken during production coupled with our quality management system.

You can count on our products, no matter whether you opt for an MID calibrated device, a low-cost uncalibrated alternative or our meter accessories.

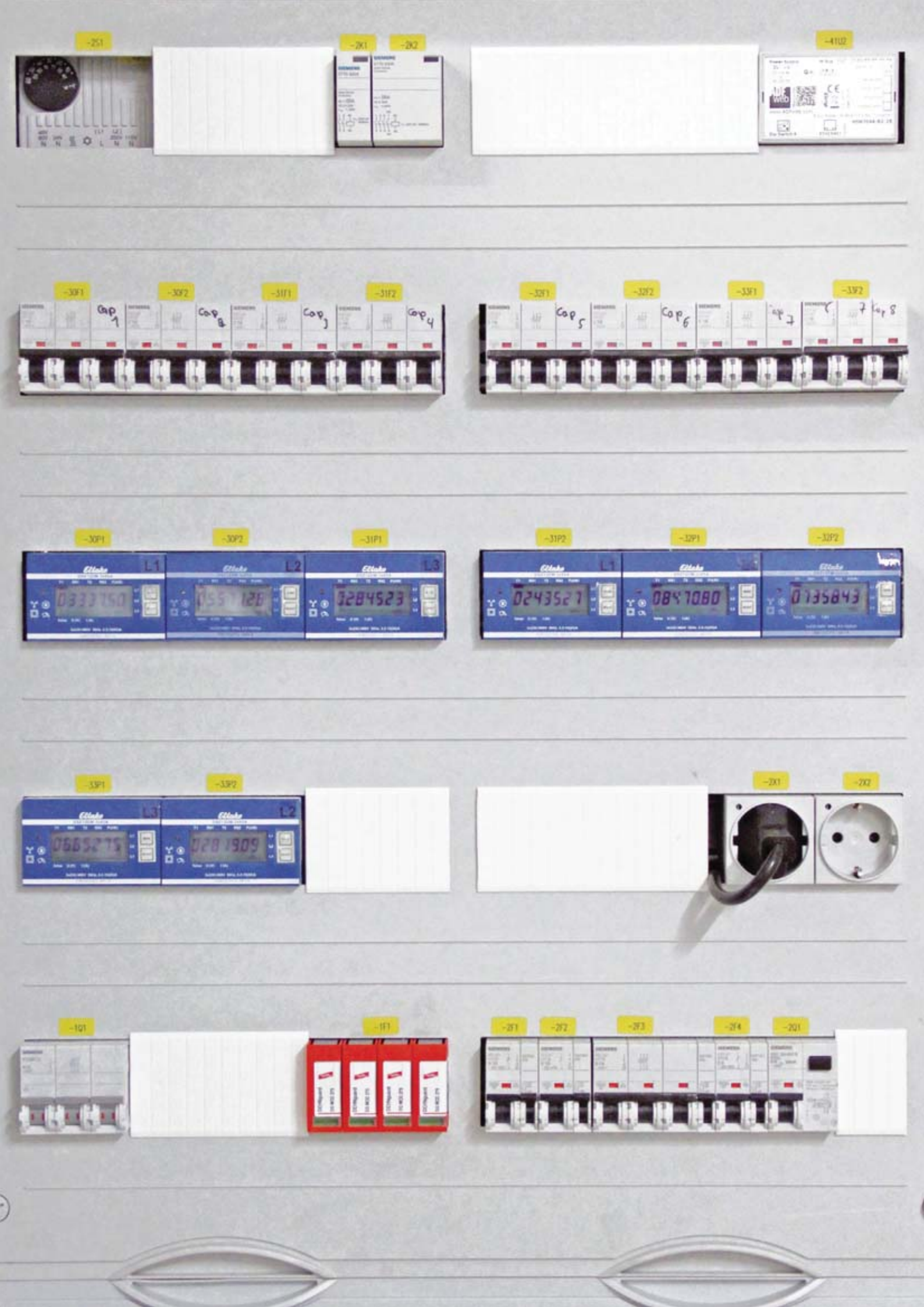
-2S1
-2K1
-2K2
-41U2
-30F1
-30F2
-31F1
-31F2
-32F1
-32F2
-33F1
-33F2
-30P1
-30P2
-31P1
-31P2
-32P1
-32P2
-33P1
-33P2
-2X1
-2X2
-1Q1
-1F1
-2F1
-2F2
-2F3
-2F4
-2Q1

Index

Selection Table three-phase meters and single-phase energy meters	6
Three-phase meter DSZ15D-3x80A MID	7
Three-phase meter DSZ15DE-3x80A, without MID approval	8
Three-phase meter DSZ15WD-3x5A MID	9
M-bus three-phase energy meter DSZ15DM-3x80A MID (in preparation)	10
M-bus CT operated three-phase energy meter DSZ15WDM-3x5A MID (in preparation)	11
RS485 bus three-phase energy meter DSZ14DRS-3x80A MID	12
RS485 bus two way three-phase energy meter DSZ14WDRS-3x5A MID	13
Single-phase energy meters WSZ15D-32A MID and WSZ15D-65A MID	14
Single-phase energy meter WSZ15DE-32A, without MID approval	15
Single-phase energy meter WZR12-32A with reset, without MID approval	16
Single-phase energy meter WSZ60D-60A MID for 3-point energy meter mounting	17
Wireless Visualisation and Control Software GFVS-Energy	18
Wireless energy meter transmitter module FSS12-12V DC	18
Direct display with the wireless energy consumption indicator FEA65D	19
Direct display with the single-phase energy meter with energy consumption indicator EVA12-32A	20
RS485 bus wireless single-phase energy meter FWZ14-65A	21
Wireless single-phase energy meter FWZ61-16A	21
Wireless single-phase energy meters FWZ12-16A and FWZ12-65A	22
RS485 bus meter collector F3Z14D	23
RS485 bus energy meter data gateway FSDG14	24
Wireless actuator impulse switch with integr. relay function FSR61VA-10A with current measurement	25
Socket switching actuator FSVA-230V-10A with current measurement	25
Technical data single-phase energy meter, three-phase meters and energy consumption indicator	26
Technical data single-phase energy meter for 3-point energy meter mounting	27
Measuring Instruments Directive MID	28
Installation instructions for electricians	29

Selection Table
Three-phase and Single-phase Energy Meters

The smart counting champions

Depending on the customer's installation, only a conventional meter panel is required for billing with the electricity supply operator. On the other hand, dwellings and businesses can be billed using small three-phase meters installed in power distribution panels.
See the installation instructions for electricians on page 10-26.

It is then the task of the building management service to read the intermediate meter. This either takes place at the same time as heating consumption is read or centrally, e.g. when the meter interface is evaluated. All Eltako energy meters for rail mounting are therefore fitted as standard with an S0 interface.

Page	7	8	9	10	11	12	13	14 top	14 bottom	15	16	17
	NEW in stock	NEW in stock	NEW in stock	in preparation*	in preparation*	NEW February 2018	February 2018	NEW in stock	NEW in stock	NEW in stock	in stock	in stock
	DSZ15D-3x80A	DSZ15DE-3x80A	DSZ15WD-3x5A	DSZ15DM-3x80A	DSZ15WDM-3x5A	DSZ14DRS-3x80A	DSZ14WDRS-3x5A	WSZ15D-32A	WSZ15D-65A	WSZ15DE-32A	WZR12-32A	WSZ60D-60A
Modular device for mounting on DIN rail EN 60715 TH35, number of modules 18 mm each	4	4	4	4	4	4	4	1	1	1	1	-
Meter mounting installation												■
Single-phase energy meter								■	■	■	■	■
Three-phase energy meter	■	■	■	■	■	■	■					
With MID approval	■		■	■	■	■	■	■	■			■
Reference current I_{ref} (Limiting current I_{max}) A	10(80)	10(80)	5(6)[1]	10(80)	5(6)[1]	10(80)	5(6)[1]	5(32)	10(65)	5(32)	5(32)	5(60)
Display LC display digits	5+2[2] 6+1	5+2[2] 6+1	6+1	5+2[2] 6+1	6+1	5+2[2] 6+1	6+1	5+2[2] 6+1	5+2[2] 6+1	5+2[2] 6+1	2/4	6+1
Accuracy class MID, inaccuracy ±1%	B	B	B	B	B	B	B	B	B	B	B	A (±2%)
With return stop	■	■	■	■	■	■	■	■	■	■	■	■
Display instantaneous values	■	■	■	■	■	■	■	■	■	■	■	
Indication of misconnection	■	■	■	■	■	■	■	■	■	■	■	
Low standby loss	■	■	■	■	■	■	■	■	■	■	■	
S0 interface potential	■	■	■					■	■	■		
M-bus interface				■	■							
Interface for Eltako RS485 bus						■	■					

[1] CT operated energy meter
[2] Switches over automatically from 5+2 to 6+1.
* DSZ12DM-3x65A and DSZ12WDM-3x5A are still available.

MID meters require no subsequent calibration with calibration mark. Instead, they are the equivalent of calibrated meters as a result of MID testing and an EU Declaration of Conformity from the manufacturer.

Three-phase Energy Meter
DSZ15D-3x80A MID

Typical connection

4-wire-connection 3x230/400V

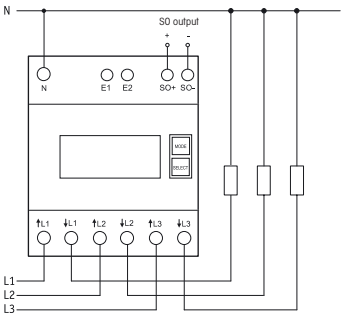

DSZ15D-3x80A MID

Maximum current 3x80 A. Standby loss 0.5 watt per path only.

Modular device for DIN-EN 60715 TH35 rail mounting.
4 modules = 70 mm wide and 58 mm deep.

Accuracy class B (1%). With S0 interface.

It measures active energy by means of the current between input and output. The internal power consumption of 0.5 watt active power per path is neither metered nor indicated.

1, 2 or 3 phase conductors with max. currents up to 80 A can be connected.
The inrush current is 40 mA.

The N terminal must always be connected.

The 7 segment LC display is also legible twice within a period of 2 weeks without power supply.

Power consumption is shown by a bar flashing at a rate of 100 times per kWh.

Designed as standard for using as double-tariff meter: Switch over to a second tariff by applying 230 V to terminals E1/E2.

On the right next to the display are the keys MODE and SELECT. Press them to scroll through the menu according to the operation manual. First the **background lighting** switches on. The display then shows the total active energy per tariff, the active energy per resettable memory RS1 or RS2, and the instantaneous values of consumption, voltage and current per phase.

Error message (false)

When the phase conductor is missing or the current direction is wrong ‚false‘ and the corresponding phase conductor are indicated on the display.

DSZ15D-3x80A	Three-phase energy meter, MID approval	EAN 4010312501634	**129,70 €/pc.**

Three-phase Energy Meter DSZ15DE-3x80A, without approval

Typical connection

4-wire-connection 3x230/400V

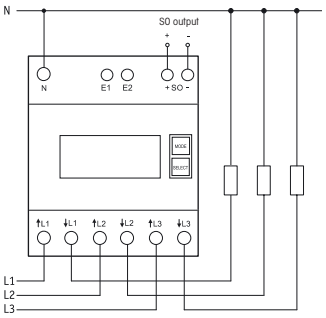

DSZ15DE-3x80A

Maximum current 3x80A. Standby loss 0.5 watt per path only.

Modular device for DIN-EN 60715 TH35 rail mounting.
4 modules = 70mm wide and 58mm deep.

Accuracy class B (1%). With S0 interface.

It measures active energy by means of the current between input and output. The internal power consumption of 0.5 watt active power per path is neither metered nor indicated. Like all meters without declaration of conformity (e.g. MID), this meter is not permitted for billing.

1, 2 or 3 phase conductors with max. currents up to 80A can be connected.
The inrush current is 40mA.

The N terminal must always be connected.

The 7 segment LC display is also legible twice within a period of 2 weeks without power supply.

Power consumption is shown by a bar flashing at a rate of 100 times per kWh.

Designed as standard for using as double-tariff meter: Switch over to a second tariff by applying 230V to terminals E1/E2.

On the right next to the display are the keys MODE and SELECT. Press them to scroll through the menu according to the operation manual. First the **background lighting** switches on. The display then shows the total active energy per tariff, the active energy per resettable memory RS1 or RS2, and the instantaneous values of consumption, voltage and current per phase.

Error message (false)

When the phase conductor is missing or the current direction is wrong ‚false` and the corresponding phase conductor are indicated on the display.

DSZ15DE-3x80A	Three-phase energy meter, without approval	EAN 4010312501719	**86,70 €/pc.**

Recommended retail prices excluding VAT.

Three-phase Energy Meter DSZ15WD-3x5A MID

Typical connection

4-wire-connection 3x230/400V

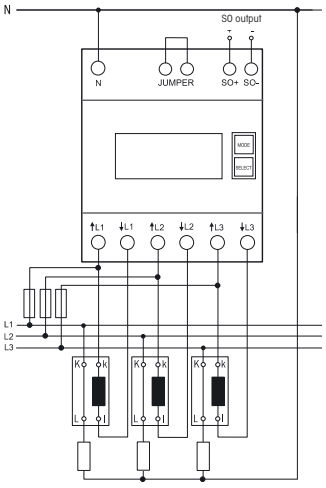

DSZ15WD-3x5A MID

CT operated three phase energy meter with settable CT ratio and MID. Maximum current 3x5A. Standby loss 0.5 watt per path only.

Modular device for DIN-EN 60715 TH35 rail mounting.
4 modules = 70mm wide and 58mm deep.

Accuracy class B (1%). With S0 interface.

This three-phase energy meter measures active energy by means of the current between input and output. The internal power consumption of 0.5 watt active power per path is neither metered nor indicated.

1, 2 or 3 phase conductors with max. currents up to 5A can be connected.
The inrush current is 10mA.

The N terminal must always be connected.

The 7 segment LC display is also legible twice within a period of 2 weeks without power supply.

Power consumption is shown by a bar flashing at a rate of 10 times per kWh.

On the right next to the display are the keys MODE and SELECT. Press them to scroll through the menu according to the operation manual. First the **background lighting** switches on. The display then shows the total active energy, the active energy per resettable memory, and the instantaneous values of consumption, voltage and current per phase.

The CT ratio can also be set. It is set to 5:5 at the factory and blocked with a bridge over the terminals which are marked with 'JUMPER'. To adjust the CT ratio to the installed transformer remove the bridge and reset the energy meter according to the operation manual. Then block it again with the bridge. Adjustable current transformer ratios: 5:5, 50:5, 100:5, 150:5, 200:5, 250:5, 300:5, 400:5, 500:5, 600:5, 750:5, 1000:5, 1250:5 and 1500:5.

Error message (false)
When the phase conductor is missing or the current direction is wrong ‚false‘ and the corresponding phase conductor are indicated on the display.

Important! Before working on the current transformers disconnect the voltage paths of the energy meters.

DSZ15WD-3x5A	Three-phase energy meter, MID approval	EAN 4010312501641	**172,00 €/pc.**

M-bus Three-phase Energy Meter DSZ15DM MID

Typical connection

4-wire-connection 3x230/400V

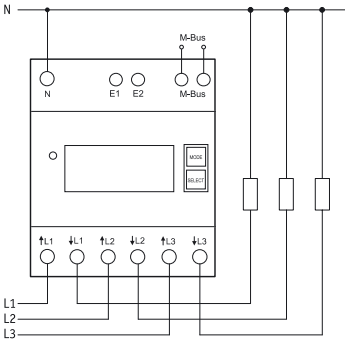

DSZ15DM-3x80A MID

M-bus three-phase energy meter.
Maximum current 3x80A. Standby loss 0.5 watt per path only.

Modular device for DIN-EN 60715 TH35 rail mounting.
4 modules = 70mm wide and 58mm deep.

Accuracy class B (1%). With M-bus interface.

It measures active energy by means of the current between input and output.

The internal power consumption of 0.5 watt active power per path is neither metered nor indicated.

1, 2 or 3 phase conductors with max. currents up to 80A can be connected.
The inrush current is 40mA.

The N terminal must always be connected.

The 7 segment LC display is also legible twice within a period of 2 weeks without power supply.

Power consumption is indicated by an LED flashing at a rate of 1000 times per KWh.

Designed as standard for using as double-tariff meter: Switch over to a second tariff by applying 230V to terminals E1/E2.

On the right next to the display are the keys MODE and SELECT. Press them to scroll through the menu. First the **background lighting** switches on. The display then shows the total active energy per tariff, the active energy of the resettable memory RS1 or RS2 as well as the instantaneous values of consumption, voltage and current per phase

Error message (false)

When the phase conductor is missing or the current direction is wrong 'false' and the corresponding phase conductor are indicated on the display.

M-bus data transfer

- On read-out all values are transferred in a telegram.
- The following telegrams are supported:
  - Initialisation: SND_NKE — Reply: ACK
  - Read out meter: REQ_UD2 — Reply: RSP_UD
  - Change primary address: SND_UD — Reply: ACK
  - Reset RS1: SND_UD — Reply: ACK
  - Slave selection for the secondary address — Reply: ACK
- The device does not reply to unknown requests
- The transfer rate is detected automatically
- The device has a voltage monitor. In case of voltage loss, all registers are saved in the EEPROM.

Changing the M-bus primary address:

To change the M-bus primary address, hold down SELECT for 3s. In the menu that appears, press MODE to increment the address by 10. Press SELECT to increment by 1. When the required primary address is set, wait until the main menu reappears.

Secondary address

- It is possible to communicate with the energy meters according to the standard EN13757 using the secondary address.
- The use of wild cards is possible.

For details refer to the operating instructions at www.eltako.com.

DSZ15DM-3x80A	M-bus three-phase energy meter, MID approval	EAN 4010312501726	**205,40 €/pc.**

Recommended retail prices excluding VAT.

M-bus CT Operated Three-phase Energy Meter DSZ15WDM MID

Typical connection

4-wire-connection 3x230/400V

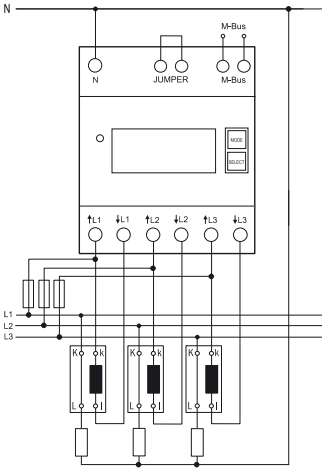

DSZ15WDM-3x5A MID

M-bus CT operated three-phase energy meter with settable CT ratio and MID. Maximum current 3x5A. Standby loss 0.5 watt per path only.

Modular device for DIN-EN 60715 TH35 rail mounting.
4 modules = 70mm wide and 58mm deep.

Accuracy class B (1%). With M-bus interface.

This three-phase meter measures active energy by means of the currents flowing between inputs and outputs. The internal power consumption of 0.5 watt active power per path is neither metered nor indicated.

1, 2 or 3 converters with secondary currents of up to 5A can be connected.
The inrush current is 10mA.

The N terminal must always be connected.

The 7 segment LC display is also legible twice within a period of 2 weeks without power supply.

Power consumption is indicated by an LED flashing at a rate of 10 times per KWh.

On the right next to the display are the MODE and SELECT buttons to browse through the menu. First the **background lighting** switches on. Then the total active energy, the active energy of the resettable memory and the instantaneous values of power, voltage and current are displayed for each outer conductor.

The CT ratio can also be set. It is set to 5:5 at the factory and blocked with a bridge over the terminals which are marked with 'JUMPER'. To adjust the CT ratio to the installed transformer remove the bridge and reset the energy meter according to the operation manual. Then block it again with the bridge. Adjustable current transformer ratios: 5:5, 50:5, 100:5, 150:5, 200:5, 250:5, 300:5, 400:5, 500:5, 600:5, 750:5, 1000:5, 1250:5 and 1500:5.

Error message (false)

If there is no outer conductor of the current direction is incorrect, 'false' and the related outer conductor are indicated in the display.

M-bus data transfer

- On read-out all values are transferred in a telegram.
- The following telegrams are supported:
  - Initialisation: SND_NKE — Reply: ACK
  - Read out meter: REQ_UD2 — Reply: RSP_UD
  - Change primary address: SND_UD — Reply: ACK
  - Reset RS1: SND_UD — Reply: ACK
  - Slave selection for the secondary address — Reply: ACK
- The device does not reply to unknown requests
- The transfer rate is detected automatically
- The device has a voltage monitor. In case of voltage loss, all registers are saved in the EEPROM.

Changing the M-bus primary address:

To change the M-bus primary address, hold down SELECT for 3s. In the menu that appears, press MODE to increment the address by 10. Press SELECT to increment by 1. When the required primary address is set, wait until the main menu reappears.

Secondary address

- It is possible to communicate with the energy meters according to the standard EN13757 using the secondary address.
- The use of wild cards is possible.

For details refer to the operating instructions at www.eltako.com.

Important!

Before working on the current transformers disconnect the voltage paths of the energy meters.

DSZ15WDM-3x5A	CT operated three-phase energy meter, MID approval	EAN 4010312501665	**205,40 €/pc.**

RS485 Bus Wireless Three-phase Energy Meter DSZ14DRS MID

Typical connection

4-wire-connection 3x230/400V

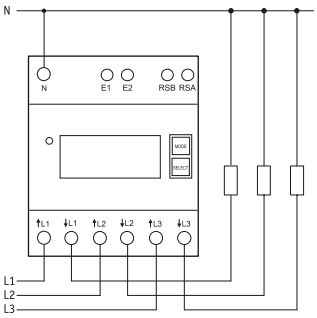

DSZ14DRS-3x80A MID

RS485 bus wireless three-phase energy meter. Maximum current 3x80 A. Standby loss 0.8 W at L1 and only 0.5 W at L2 and L3 each.

Modulair device for DIN-EN 60715 TH35 rail mounting in distribution cabinets with IP51 protection class. 4 modules = 70 mm wide and 58 mm deep.

Accuracy class B (1%). With RS485 interface.

It measures active energy by means of the current between input and output. The internal power consumption of 0,8 W or 0,5 W active power per path is neither metered nor indicated.

1, 2 or 3 phase conductors with max. currents up to 80 A can be connected.

The inrush current is 40 mA.

The terminals ↑L1 and N must always be connected.

Connection to the Eltako RS485 bus via a FBA14 by means of a 2-wire screened bus line (e.g. telephone line). The meter reading and the momentary capacity are transferred to the bus – e.g. for transfer to an external computer of the GFVS 4.0 Software – and is also transferred to the wireless network via the FAM14. For this it is necessary that a device address is assigned from the wireless antenna module FAM14, according to the operating instructions.

Also display with FEA65D.

The 7 segment LC display is also legible twice within a period of 2 weeks without power supply.

The power consumption is displayed with a LED flashing 1000 times per kWh next to the display.

Designed as standard for using as double-tariff meter: Switch over to a second tariff by applying 230V to terminals E1/E2.

On the right next to the display are the keys MODE and SELECT. Press them to scroll through the menu according to the operation manual. First the **background lighting** switches on. The display then shows the total active energy per tariff, the active energy per resettable memory RS1 or RS2, and the instantaneous values of consumption, voltage and current per phase.

Error message (false)

When the phase conductor is missing or the current direction is wrong 'false' and the corresponding phase conductor are indicated on the display.

DSZ14DRS-3x80A	RS485 bus wireless three-phase energy meter, MID approval	EAN 4010312501733	**165,00 €/pc.**

RS485 Bus Wireless Three-phase Two-way Energy Meter DSZ14WDRS MID

Typical connection

4-wire-connection 3x230/400V

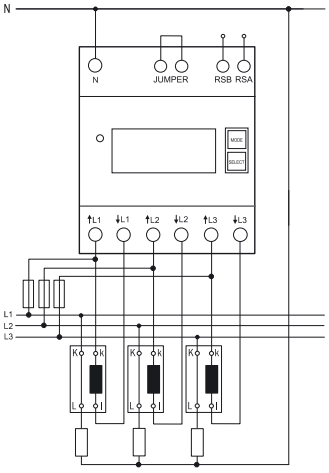

DSZ14WDRS-3x5A MID

RS485 bus wireless three-phase two-way energy meter with settable CT ratio and MID. Maximum current 3x5A. Standby loss 0.8W at L1 and only 0.5W at L2 and L3 each.

Modulair device for DIN-EN 60715 TH35 rail mounting in distribution cabinets with IP51 protection class. 4 modules = 70mm wide and 58mm deep.

Accuracy class B (1%). With RS485 interface.

This three-phase energy meter measures active energy by means of the current between input and output. The internal power consumption of 0,8W or 0,5W active power per path is neither metered nor indicated.

1, 2 or 3 phase conductors with max. currents up to 5A can be connected.
The inrush current is 10mA.

The terminals ↑L1 and N must always be connected.

Connection to the Eltako RS485 bus via a FBA14 by means of a 2-wire screened bus line (e.g. telephone line). The meter reading and the momentary capacity are transferred to the bus – e.g. for transfer to an external computer of the GFVS 3.0 Software – and is also transferred to the wireless network via the FAM14. For this it is necessary that a device address is assigned from the wireless antenna module FAM14, according to the operating instructions.

Also display with FEA65D.

The 7 segment LC display is also legible twice within a period of 2 weeks without power supply.

The power consumption is displayed with a LED flashing 10 times per kWh next to the display.

On the right next to the display are the keys MODE and SELECT. Press them to scroll through the menu. First the **background lighting** switches on. The display then shows the total active energy, the active energy of the resettable memory as well as the instantaneous values of consumption, voltage and current per phase

The CT ratio can also be set. It is set to 5:5 at the factory and blocked with a bridge over the terminals which are marked with 'JUMPER'. To adjust the CT ratio to the installed transformer remove the bridge and reset the energy meter according to the operation manual. Then block it again with the bridge. Adjustable current transformer ratios: 5:5, 50:5, 100:5, 150:5, 200:5, 250:5, 300:5, 400:5, 500:5, 600:5, 750:5, 1000:5, 1250:5 and 1500:5.

Error message (false)
When the phase conductor is missing or the current direction is wrong 'false' and the corresponding phase conductor are indicated on the display.

Important! Before working on the current transformers disconnect the voltage paths of the energy meters.

DSZ14WDRS-3x5A	RS485 bus wireless three-phase two-way energy meter, MID approval	EAN 4010312501450	**172,00 €/pc.**

Single-phase Energy Meters WSZ15D MID

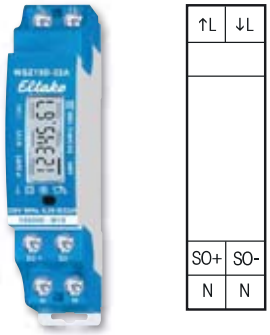

Typical connection

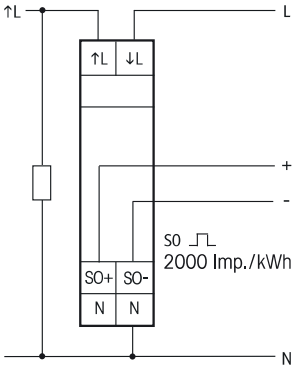

WSZ15D-32A MID

Maximum current 32 A. Standby loss 0.4 watt only.

Modular device for DIN-EN 60715 TH35 rail mounting.
1 module = 18 mm wide and 58 mm deep.
Accuracy class B (1%). With S0 interface.
This single-phase energy meter measures active energy by means of the current between input and output. The internal power consumption of 0.4 watt active power is neither metered nor indicated.
1 phase conductor with a max. current of up to 32 A can be connected.
The start current is 20 mA.
If the anticipated load exceeds 50%, maintain an air gap of ½ pitch unit to the devices mounted adjacently. If necessary, use spacer DS12.
Two N terminals for secure cross wiring of several counters.
The 7 segment LC display is also legible twice within a period of 2 weeks without power supply. Press the button.
Below the displays is a button which you can use to browse through the menu as described in the User Manual. First the **backlighting** switches on. Then you can display the total active energy, active energy of the resettable memory and the instantaneous values for active power, voltage and current.
Power consumption is shown by a bar flashing at a rate of 1000 times per kWh.
Error message
In the event of a connection error the backlighting of the display flashes.

WSZ15D-32A	Single-phase energy meter, MID approval	EAN 4010312501627	**58,20 €/pc.**

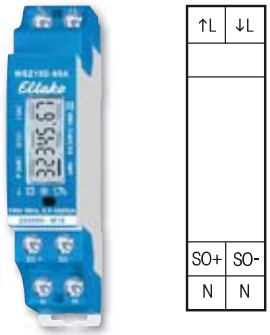

Typical connection

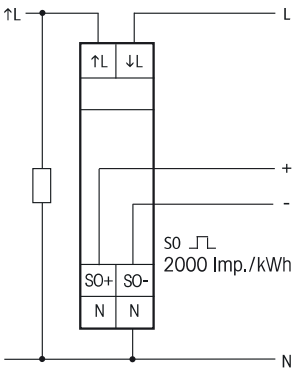

WSZ15D-65A MID

Maximum current 65 A. Standby loss 0.4 watt only.

Modular device for DIN-EN 60715 TH35 rail mounting.
1 module = 18 mm wide and 58 mm deep.
Accuracy class B (1%). With S0 interface.
This single-phase energy meter measures active energy by means of the current between input and output. The internal power consumption of 0.4 watt active power is neither metered nor indicated.
1 phase conductor with a max. current up to 65 A can be connected.
The start current is 40 mA.
If the anticipated load exceeds 50%, maintain an air gap of ½ pitch unit to the devices mounted adjacently. If necessary, use spacer DS12.
Two N terminals for secure cross wiring of several counters.
The 7 segment LC display is also legible twice within a period of 2 weeks without power supply. Press the button.
Below the displays is a button which you can use to browse through the menu as described in the User Manual. First the **backlighting** switches on. Then you can display the total active energy, active energy of the resettable memory and the instantaneous values for active power, voltage and current.
Power consumption is shown by a bar flashing at a rate of 1000 times per kWh.
Error message
In the event of a connection error the backlighting of the display flashes.

WSZ15D-65A	Single-phase energy meter, MID approval	EAN 4010312501696	**71,50 €/pc.**

Single-phase Energy Meter WSZ15DE-32A, without approval

Typical connection

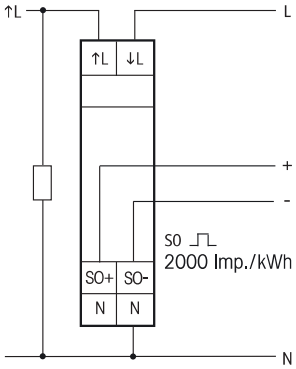

WSZ15DE-32A

Maximum current 32 A. Standby loss 0.5 watt only.

Modular device for DIN-EN 60715 TH35 rail mounting. 1 module = 18 mm wide and 58 mm deep.

Accuracy class B (1%). With S0 interface.

It measures active energy by means of the current between input and output. The internal power consumption of 0.5 watt active power is neither metered nor indicated. Like all meters without declaration of conformity (e.g. MID), this meter is not permitted for billing.

Every 30 seconds, the display switches for 5 seconds from the accumulated active energy in kWh to the momentary consumption in watts.

1 phase conductor with a max. current up to 32 A can be connected. If the anticipated load exceeds 50%, maintain an air gap of ½ pitch unit to the devices mounted adjacently.
If necessary, use spacer DS12. The inrush current is 20 mA. The display can only be read when the power supply is on. However, the consumption is saved to a non-volatile memory and is displayed immediately after power restoration.

Two N terminals for secure cross wiring of several counters.

The flashing decimal point is dependent on power consumption and indicates that power is being consumed. If the connection is incorrectly wired, the display shows the message 'false'.

The digital display has 7 digits. Two decimal places are indicated up to 99999.99 kWh. Above 100000.0 kWh there is only one decimal place. Assuming the maximum theoretical power consumption, the display would have a service life of more than 15 years.

WSZ15DE-32A	Single-phase energy meter, without approval	EAN 4010312501702	**46,20 €/pc.**

Single-phase Energy Meter WZR12 with reset, without approval

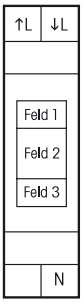

Typical connection

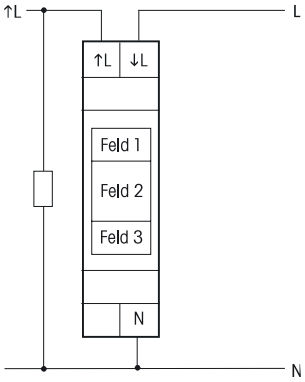

WZR12-32A

Maximum current 32 A, standby loss 0.5 watt only.

Modular device for DIN-EN 60715 TH35 rail mounting.
1 module = 18 mm wide, 58 mm deep.

This single-phase energy meter with reset function uses the current between input and output to measure active energy and saves the consumption parameter in a non-volatile memory.

Like all meters without declaration of conformity (e.g. MID), this meter is not permitted for billing.

Accuracy conforms to Class B MID (1%) like all Eltako single-phase energy meters, the inrush current is 20 mA.

The display is subdivided into 3 fields.

- **Field 1:**
  This display refers to the cumulative value in field 3.
  IIII moving slowly to the right = Field 3 shows the cumulative consumption since last reset. This is the display standard mode.
  H01 = Field 3 shows the consumption for the last hour up to H24 = 24 hours ago.
  D01 = Field 3 shows the consumption for the last day up to D95 = 95 days ago.
- **Field 2:**
  Instantaneous values of energy consumption (active power) in watt (W) or kilowatt (kW). The display arrows on the left and right show the automatic change W and kW.
- **Field 3:**
  Cumulative value up to 9999 kWh. Display up to 9.999 kWh with 3 decimal digits, from 10 kWh with 1 decimal digit and from 1000 kWh without decimal digit.

Press the left button MODE to scroll down the display options which are shown in field 1: H01 and D01 as described above. Finally, press MODE to show the abbreviation of the set language, e.g. GB for English, D for German, F for French and ES for Spanish.

Press the right button SELECT once within the display options to increment the indicated figure by 1. The corresponding value is indicated in field 3. The last clock hour then becomes the hour before last, etc.

If the active language was selected with MODE, press SELECT to switch to a different language. Exit the new language setting by pressing MODE to activate the setting.

The program returns to the standard display mode automatically if MODE or SELECT are not operated for 20 seconds or if you press both buttons briefly simultaneously.

Reset

Hold down the buttons MODE and SELECT simultaneously for 3 seconds until RES appears in segment 1. Then press SELECT briefly to reset all memories. Afterwards the program returns automatically to standard display mode.

WZR12-32A	Single-phase energy meter with reset, without approval	EAN 4010312501252	**53,10 €/pc.**

Single-phase Energy Meter WSZ60D-60A MID for 3-point energy meter mounting

WSZ60D-60A MID

Maximum current 60 A, standby loss 0.5 watt.

Single-phase energy meter for 3-point energy meter mounting.

Accuracy class A.

This single-phase energy meter measures active energy by means of the current between input and output. The internal power consumption of 0.5 watt active power is neither metered nor indicated.

1 phase conductor with a max. current up to 60 A can be connected. The inrush current is 10 mA.

LC display with 7 digits, therefrom 1 digit after the decimal point.

Power consumption is shown by a red LED flashing at a rate of 1000 times per kWh. Permanent light: halt; light off: free of tension.

WSZ60D-60A	Single-phase energy meter, MID approval	EAN 4010312501573	**59,90 €/pc.**

Wireless Visualisation and Control Software GFVS-Energy and Wireless Energy Meter Transmitter Module FSS12

With the Wireless Visualisation and Control Software GFVS-Energy and the USB receiver FAM-USB, the wireless telegrams of the wireless energy meter transmitter module FSS12 or the two- and three-phase energy meters and the transmitter modules can be received or displayed on the PC.
⚠ Caution! The software GFVS-Energy is contained in the Wireless Visualisation and Control Software GFVS 4.0 and need not be installed separately.

with FAM-USB

GFVS-Energy

Wireless Visualisation and Control Software for up to 100 electricity meters with S0 interface with FSS12 energy meter transmitter modules as well as wireless two-way energy meter, wireless three-phase energy meter and wireless energy meter transmitter modules.

The software can be downloaded for free from the Eltako homepage. The software GFVS 4.0 on the Smart Home central unit SafeIV can evaluate up to 250 energy meters. **The wireless receiver FAM-USB** with USB port is required for PC reception and if required for transmitting wireless telegrams from a PC to load shedding relay and is not included in the scope of supply. It must be licenced via web.

FAM-USB	Wireless USB receiver/transmitter	EAN 4010312312971	**79,90 €/pc.**

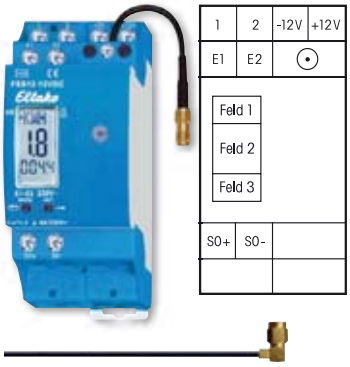

The enclosed small antenna can be replaced with a wireless antenna FA250 with magnetic base and cable.

Typical connection

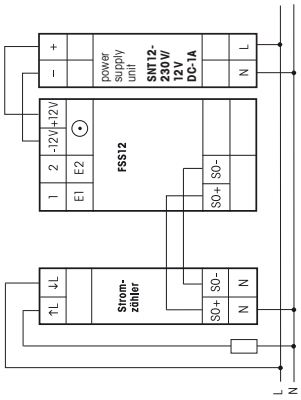

FSS12-12V DC

Wireless energy meter transmitter module for connection to S0 interface of many single-phase energy meters and three-phase energy meters. Only 0.5 watt standby loss. With load shedding relay 1 NO contact potential free 4 A/250 V. With exchangeable antenna. If required, a wireless antenna FA250 can be connected.

Modular device for DIN-EN 60715 TH35 rail mounting. 2 modules = 36 mm wide, 58 mm deep.
The energy meter transmitter module FSS12 evaluates the signals from the energy meter S0 interface and transmits wireless telegrams containing consumption and meter reading to the Eltako wireless network for evaluation on a PC using the Visualisation and Control Software GFVS 4.0 and GFVS-Energy. On three-phase energy meters, the data sent includes normal rate (HT) or off-peak (NT) energy tariff data, provided the E1/E2 terminals on the three-phase energy meter are connected to E1/E2 on the FSS12. From production week 42/2012 also with adjustable pulse rate.
GFVS-Energy supports up to 100 transmitter modules and GFVS 3.0 up to 250 transmitter modules.
The 12 V DC supply voltage is powered at 12 W by a switch mode power supply unit SNT12-230 V/12 V DC-1 A that is only 1 pitch unit wide. If the relay of the FSS12 is switched on, a power of 0.6 watts is required.
The setting and display screen is subdivided into 3 fields:

- **Field 1:** The normal display is the unit of the meter reading currently displayed in Field 3. This alternates every 4 seconds with either kilowatt hours kWh (KWH in display) or megawatt hours MWh (MWH in display). The display in Field 1 is supplemented by a + sign after the reading to indicate that the off-peak tariff rate is applied to E1/E2.
- **Field 2:** Instantaneous values of energy consumption (active power) in watt (W) or kilowatt (kW). The left-pointing arrow in Field 1 indicates an automatic switchover from 0 to 99 W to 0.1 to 65 kW.
- **Field 3:** The meter reading is the normal display. Every 4 seconds the display alternates between 3 whole numbers and 1 decimal point (from 0.1 to 999.9 kWh) and 1 or max. 3 whole numbers (from 0 to 999 MWh). The meter reading is displayed without decimals in increments of 1 kWh with freely chosen pulse rates whose last digit is not 0.

Wireless telegrams: Within 20 seconds, a power telegram is sent if the power changes by minimum 10%. A switchover from HT to NT is transmitted immediately in the same way as a meter reading change. A full telegram comprising meter reading HT, meter reading NT and power is transmitted 20 seconds after the power supply is switched on and then every 10 minutes. The LED lights up briefly when a telegram is transmitted.
For settings with the buttons MODE and SET see the operating instructions.

FSS12-12V DC	Wireless energy meter transmitter module	EAN 4010312301944	**87,00 €/pc.**

Direct Display with the Wireless Energy Consumption Indicator FEA65D

FEA65D-wg

Wireless energy consumption indicator with display for individual fitting and mounting into the E-design switching system. For up to 20 wireless single-phase energy meters, wireless three-phase energy meters and energy meter transmitter modules. Illuminated display. Standby loss 0.2 watt only.

Power supply 12 V DC. A 20 cm long red/black connecting wire is routed to the rear.

The complete module can be removed from the frame for screw mounting.

We recommend stainless-steel countersunk screws 2.9x25 mm, DIN 7982 C, for screw connections. Both with rawl plugs 5x25 mm and with 55 mm switch boxes. Set of 2 stainless-steel countersunk screws 2,9x25 mm and plugs 5x25 mm are enclosed.

The energy consumption indicator evaluates the information of the wireless two-phase energy meters FWZ12 and FWZ61, the RS485 two-phase energy meter transmitter module FWZ14-65 A, the RS485 three-phase energy meters DSZ14DRS and DSZ14WDRS as well as the wireless energy meter transmitter module FSS12.

The last energy meter selected is displayed from EM01 to EM20: the accumulated energy consumption (meter reading) in KWh with 7 digits, of which one digit is a decimal point, and the currently consumed active power (momentary capacity) from 15 watts to 65,000 watts.

The data of one energy meter transmitter module FSS12 and one RS485 three-phase energy meter DSZ14DRS also contains separate values for normal rate (HT) and off-peak (NT), both of which are displayed. Momentary capacity is also identified accordingly.

When you press MODE for longer than two seconds, the display goes to energy meter EM01.

For energy meter EM01, an additional statistic can be displayed for total energy consumption over the last hours, days, months and years. This is obtainable by briefly pressing MODE, *statistic* appears in the display. Press MODE to browse through all the possible displays *consump. total, hour, day, month* and *year.*

Press the button SET within the display options. Each press of the button increments the number displayed by 1 and the actual value is indicated in the display. The last full hour then becomes the last hour but one, etc.

Hour 01 = Displays consumption over the last full hour to 24 = 24 hours ago.

Day 01 = Displays consumption of the last full day up to day 31 = 31 days ago.

Month 01 = Displays consumption of the last full month up to month 12 = 12 months ago.

Year 01 = Displays consumption of the last full year up to year 24 = 24 years ago.

20 seconds after last pressing MODE or SET, and if you press and hold down MODE for longer than 2 seconds, the program revert automatically back to normal display.

FEA65D-wg	Wireless energy consumption indicator with display, pure white glossy	EAN 4010312315903	**94,50 €/pc.**

Single-phase energy meter with energy consumption indicator EVA12

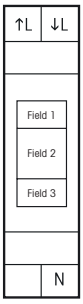

Typical connection

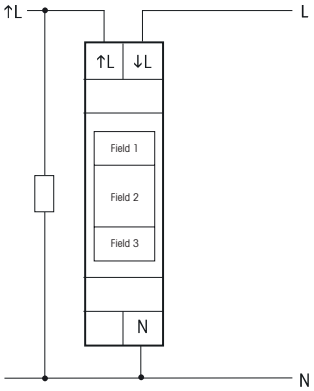

EVA12-32A

Maximum current 32 A, standby loss 0.5 watt only.

Modular device for DIN-EN 60715 TH35 rail mounting.
1 module = 18 mm wide, 58 mm deep.

The energy consumption indicator EVA12 uses the current between input and output to measure active energy in the same way as a single-phase energy meter. It saves the consumption parameter in a non-volatile memory.

Like all meters without declaration of conformity (e.g. MID), this meter is not permitted for billing.

Accuracy conforms to Class B MID (1%) like all Eltako single-phase energy meters.
The inrush current is 20 mA.

In this way the energy consumption indicator reproduces exactly the reading on the billing energy meter installed at a different location in the building.

The display is subdivided into 3 fields.

- **Field 1:**
  This display refers to the cumulative value in field 3.
  IIII moving slowly to the right = Field 3 shows the cumulative consumption since last reset. This is the display standard mode.
  H01 = Field 3 shows the consumption for the last hour up to H24 = 24 hours ago.
  D01 = Field 3 shows the consumption for the last day up to D31 = 31 days ago.
  M01 = Field 3 shows the consumption for the last month up to M12 = 12 months ago.
  Y01 = Field 3 shows the consumption for the last year up to Y24 = 24 years ago.
- **Field 2:**
  Instantaneous values of energy consumption (active power) in watt (W) or kilowatt (kW). The display arrows on the left and right show the automatic change W and kW.
- **Field 3:**
  Cumulative value in kWh. Display up to 9.999 kWh with 3 decimal digits, from 10 kWh with 1 deciaml digit and from 1000 kWh without decimal digit.

Press the left button MODE to scroll down the display options which are shown in field 1: H01, D01, M01 and Y01 as described above. Finally, press MODE to show the abbreviation of the set language, e.g. GB for English, D for German and F for French.

Press the right button SELECT once within the display options to increment the indicated figure by 1. The corresponding value is indicated in field 3. The last clock hour then becomes the hour before last, etc.

If the active language was selected with MODE, press SELECT to switch to a different language. Exit the new language setting by pressing MODE to activate the setting.
The program returns to the standard display mode automatically if MODE or SELECT are not operated for 20 seconds or if you press both buttons briefly simultaneously.

Reset

To start saving the values to the nearest hour, we recommend performing a reset at an opportune moment after installation. Hold down the buttons MODE and SELECT simultaneously for a further 3 seconds until RES appears in field 1. Then press SELECT briefly to reset all memories. Afterwards the program returns automatically to standard display mode.

EVA12-32A	Single-phase energy meter with energy consumption indicator	EAN 4010312500828	**59,90 €/pc.**

Recommended retail prices excluding VAT.

FWZ14-65A

RS485 bus wireless single-phase energy meter, maximum current 65 A. Only 0.5 watt standby loss.

Modular device for DIN-EN 60715 TH35 rail mounting. 1 module = 18 mm wide, 58 mm deep. Accuracy class B (1%). With RS485 interface.

Connection to the Eltako-RS485 bus. Bus cross wiring and power supply with jumper.

The meter reading, the current power and the serial number will be handed over to the bus – eg for forwarding to an external computer, the software GFVS 4.0 or GFVS-Energy – and also to the wireless network via FAM14. For this it is necessary that a device address is assigned from the wireless antenna module FAM14, according to the manual.

Also display with FEA65D.

It measures active energy by means of the current between input and output. The internal power consumption of 0.5 watt active power is not metered.

Like all meters without declaration of conformity (e.g. MID), this meter is not permitted for billing.

1 phase conductor with a max. current up to 65 A can be connected.

The inrush current is 40 mA. In operation the rotary switch must be set to AUTO.

Power consumption is indicated using a LED.

If the L input and the L output were interchanged when hooked up, a normal rate (HT)/off-peak (NT) switchover telegram is transmitted to indicate the hook-up error.

If the anticipated load exceeds 50%, maintain an air gap of ½ pitch unit to the devices mounted adjacently. Thereto included are 2 spacers DS14, a short jumper and two long jumpers.

FWZ14-65A	RS485 bus wireless single-phase energy meter	EAN 4010312501511	**61,10 €/pc.**

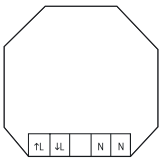

FWZ61-16A

Wireless single-phase energy meter, maximum current 16 A. Only 0.5 watt standby loss.

For installation. 45 mm long, 45 mm wide, 35 mm deep. Accuracy class B (1%).

This single-phase energy meter measures active energy by means of the current between input and output and transmits the consumption and meter reading over the Eltako wireless network.Accuracy class B (1%).

Evaluation on the computer with Eltako Wireless Building Visualisation and Control Software GFVS or with energy consumption indicator FEA65D.

GFVS-Energy supports up to 100 transmitter modules and GFVS 4.0 up to 250 transmitter modules.

The internal power consumption of max. 0.5 watt active power is neither metered nor indicated.

Like all meters without declaration of conformity (e.g. MID), this meter is not permitted for billing.

1 phase conductor with a max. current up to 16 A can be connected. The inrush current is 20 mA. The consumption is saved to a non-volatile memory and is immediately available again after a power failure.

Wireless telegrams: A telegram is transmitted within 20 seconds if the power status changes by min. 10 percent. A change in meter reading is transmitted immediately. A full telegram comprising meter reading and power status is transmitted every 10 minutes.

When the power supply is switched on, a **teach-in telegram** is sent to teach in the associated energy consumption indicator.

If the L input and the L output were interchanged when hooked up, a normal rate (HT)/off-peak (NT) switchover telegram is transmitted to indicate the hook-up error.

FWZ61-16A	Wireless single-phase energy meter	EAN 4010312302354	**82,90 €/pc.**

Wireless Single-phase Energy Meters FWZ12

FWZ12-16A

Wireless single-phase energy meter, maximum current 16 A. Only 0.5 watt standby loss.

Modular device for DIN-EN 60715 TH35 rail mounting.
1 module = 18 mm wide, 58 mm deep.
This single-phase energy meter measures active energy by means of the current between input and output and transmits the consumption and meter reading over the Eltako wireless network. Accuracy class B (1%).
Evaluation on the computer with Eltako Wireless Building Visualisation and Control Software GFVS or with energy consumption indicator FEA65D.
GFVS-Energy supports up to 100 transmitter modules and GFVS 4.0 up to 250 transmitter modules.
The internal power consumption of max. 0.5 watt active power is neither metered nor indicated.
Like all meters without declaration of conformity (e.g. MID), this meter is not permitted for billing.
1 phase conductor with a max. current up to 16 A can be connected. The inrush current is 20 mA. The consumption is saved to a non-volatile memory and is immediately available again after a power failure.
Wireless telegrams: A telegram is transmitted within 20 seconds if the power status changes by min. 10 percent. A change in meter reading is transmitted immediately. A full telegram comprising meter reading and power status is transmitted every 10 minutes.When the power supply is switched on, a **teach-in telegram** is sent to teach in the associated energy consumption indicator.
If the L input and the L output were interchanged when hooked up, a normal rate (HT)/off-peak (NT) switchover telegram is transmitted to indicate the hook-up error.

FWZ12-16A	Wireless single-phase energy meter	EAN 4010312303184	**83,20 €/pc.**

FWZ12-65A

Wireless single-phase energy meter, maximum current 65 A. Only 0.5 watt standby loss.

Modular device for DIN-EN 60715 TH35 rail mounting. 1 module = 18 mm wide, 58 mm deep.
This single-phase energy meter measures active energy by means of the current between input and output and transmits the consumption and meter reading over the Eltako wireless network. Accuracy class B (1%).
Evaluation on the computer with Eltako Wireless Building Visualisation and Control Software GFVS or with energy consumption indicator FEA65D.
GFVS-Energy supports up to 100 transmitter modules and GFVS 4.0 up to 250 transmitter modules.
The internal power consumption of max. 0.5 watt active power is neither metered nor indicated.
Like all meters without declaration of conformity (e.g. MID), this meter is not permitted for billing.
1 phase conductor with a max. current up to 65 A can be connected.
If the anticipated load exceeds 50%, maintain an air gap of ½ pitch unit to the devices mounted adjacently. If necessary, use spacer DS12.
The inrush current is 40 mA. The consumption is saved to a non-volatile memory and is immediately available again after a power failure.
Wireless telegrams: A telegram is transmitted within 60 seconds if the power status changes by min. 10 percent. A change in meter reading is transmitted immediately. A full telegram comprising meter reading and power status is transmitted every 10 minutes. When the power supply is switched on, a **teach-in telegram** is sent to teach in the associated energy consumption indicator.
If the L input and the L output were interchanged when hooked up, a normal rate (HT)/off-peak (NT) switchover telegram is transmitted to indicate the hook-up error.

FWZ12-65A	Wireless single-phase energy meter	EAN 4010312311059	**89,80 €/pc.**

RS485 Bus Wireless Meter Collector F3Z14D

Scanner for Ferraris meter AFZ

F3Z14D

RS485 bus wireless meter collector for electricity, gas and water meters. For 3 S0 interfaces and/or 3 AFZ scanners, only 0.1 watt standby loss.

Modular device for DIN-EN 60715 TH35 rail mounting.
1 modul = 18 mm wide, 58 mm deep.

Connection to the Eltako-RS485 bus. Bus cross wiring and power supply with jumper.

This meter concentrator concentrates the data of up to three electricity, data and water meters and supplies this data to the RS485 bus. Either for forwarding to an external computer or for sending over the Wireless Building System.

Hook-up is either by connection to the S0 interface of the meters or by use of an AFZ scanner on each Ferraris meter. The scanner is bonded above the rotary disc of the meter and connected by its connecting wire to one of the S01-S03/GND terminals. The F3Z14D detects automatically whether an S0 interface or an AFZ is connected.

The meter reading is entered into the display by two pushbuttons as well as the impulse rate (number of impulses or revolutions per kilowatt hour or cubic meter). The settings can be locked.

Meter readings can be entered and read out using the **PCT14 PC Tool.** In addition, impulse rates can be entered. The default display is selectable and operation of the device is interlocked.

The display is subdivided into 3 fields.

Field 1:
The default display is the unit of the meter reading currently displayed in Field 3, either in kilowatt hours kWh or megawatt hours MWh or cubic meter M^3 or cubic decametre DM^3

Field 2:
Momentary value of active power in watts and kilowatts or flow in centilitres and decilitres.

The arrow on the left in display field 1 indicates automatic switchover from 0-99 W or cl/s to 0.1 to 65 kW or dal/s. The display depends on the number of impulses of the meter.
The displayed minimum load is e.g. 10 watts at 2000 impulses per KWH and 2000 watts at 10 impulses per KWH

Field 3:
The meter reading is the default display. Every 4 seconds, the display alternates between 3 integer numbers and 1 decimal point (from 0 to 999.9) and an additional 1 or to 3 integer numbers (from 0 to 999).

Select meter in display:
Press MODE and then press MODE again to select the ***ANZ* function.** Press SET to select the meter number to be displayed as default. Press MODE to confirm.

Issue device address in the bus and send teach-in telegrams as described in the operating instructions.

All Eltako energy meters are fitted with an S0 interface and can therefore be connected to the energy meter concentrator F3Z14D. Only devices FWZ14-65A, DSZ14DRS-3x65A and DSZ14WDRS-3x5A are directly connected to the bus.

Further settings can be made and actuators configured using the PC Tool PCT14.

F3Z14D	RS485 bus wireless meter collector	EAN 4010312501528	**49,90 €/pc.**
AFZ	Scanner for each Ferraris meter	EAN 4010312315576	**250,40 €/pc.**

Recommended retail prices excluding VAT.

RS485 Bus Wireless Energy Meter Data Gateway FSDG14

Operating mode rotary switch

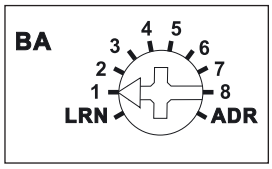

Standard setting ex works.

IR scanner for energy meters

FSDG14

RS485 bus wireless energy meter data gateway for meters equipped with an IEC 62056-21 IR interface. 2 channels. Only 0.4 watt standby loss.

Modular device for DIN-EN 60715 TH35 rail mounting. 1 module = 18 mm wide, 58 mm deep.

Connection to the Eltako-RS485 bus. Bus cross wiring and power supply with jumper.

This energy meter data gateway can provide the data of an electronic domestic supply meter (eHZ-EDL) with IR interface according to IEC 62056-21 and SML protocol version 1 to the RS485 bus. Either for forwarding to an external computer or the GFVS software.

Regular flashing of the **green LED** indicates that the FSDG14 is receiving data from the meter. Active power, up to 4 meter readings and the serial number are transferred. The serial number corresponds to the last 4 bytes (hex) of the server ID printed on the meter. The telegram is sent over the wireless building service by means of the wireless antenna module FAM14. Usage data are transmitted over channel 1 and delivery data over channel 2. It is therefore essential for the FAM14 to issue a device address. If there is a change in active power or a meter reading, the appropriate telegram is sent immediately and all telegrams including the serial number are sent cyclically every 10 minutes.

Also display with FEA65D.

The **PCT14 PC tool** can also read out the FSDG14.

Turn the rotary switch to select the following operating modes (OBIS codes according to IEC 62056-61):

1: Usage meter (1.8.0) and usage power on channel 1, delivery meter (2.8.0) and delivery power on Channel 2.

2: Usage tariff 1 (1.8.1) and tariff 2 (1.8.2) and usage power on channel 1, delivery tariff 1 (2.8.1) and tariff 2 (2.8.2) and delivery power on channel 2.

3: Usage tariff 1 (1.8.1) and tariff 2 (1.8.2) and usage power on channel 1, delivery meter (2.8.0) and delivery power on Channel 2.

4: Usage meter (1.8.0) and usage power on channel 1, delivery tariff 1 (2.8.1) and tariff 2 (2.8.2) and delivery power on channel 2.

The link is made by using an AIR IR scanner. The scanner is attached by its fixing magnets to the IR output of the meter and is connected by its connecting cable to terminals Tx, Rx, GND and +12 V.

FSDG14	RS485 bus Wireless energy meter data gateway	EAN 4010312316146	**45,10 €/pc.**
AIR	IR scanner for energy meters	EAN 4010312316153	**110,30 €/pc.**

Recommended retail prices excluding VAT.

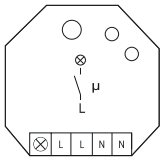

Typical connection

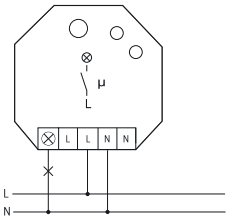

FSR61VA-10A

1 NO contact not potential free 10 A/250 V AC, incandescent lamps up to 2000 watts, off delay with switch-off early warning and switchable pushbutton permanent light. With integrated current measurement up to 10 A. Encrypted wireless, bidirectional wireless and repeater function are switchable. Only 0.8 watt standby loss.

For installation. 45 mm long, 45 mm wide, 33 mm deep.
Supply voltage and control voltage 230 V. If a power failure occurs, the switching state is retained. If a power failure occurs repeatedly, the device is switched off in a defined sequence. After installation, wait for short automatic synchronisation before the switched consumer is connected to the mains. Apparent power is measured by the integrated current measurement from approx. 10 VA to 2300 VA when the contact is closed. A wireless telegram is transmitted into the Eltako wireless network within 30 seconds after switching on the load or after a change in power by min 5% and cyclically every 10 minutes.
Evaluation on the computer with Eltako Wireless Building Visualisation and Control Software GFVS or with energy consumption indicator FEA65D. GFVS-Energy supports up to 100 transmitter modules and GFVS 4.0 up to 250 transmitter modules.
Starting in production week 11/14, you can teach in encrypted sensors. You can switch on **bidirectional wireless** and/or a **repeater** function.
Every change in state and incoming central command telegrams are confirmed by a wireless telegram. This wireless telegram can be taught-in in other actuators, in the GFVS software and in universal displays.
A detailed description is provided in the catalogue 'Eltako – The System in the Building', Chapter 3.

FSR61VA-10A	Wireless actuator Impulse switch with integr. relay function with current measurement	EAN 4010312311462	**81,90 €/pc.**

FSVA-230V-10A

1 NO contact not potential free 10 A/250 V AC, incandescent lamps up to 2000 watts, ESL and LED up to 400 W. With integrated current measurement up to 10 A. Encrypted wireless, bidirectional wireless and repeater function are switchable. Only 0.8 watt standby loss.

Adapter for German fused safety socket. With increased shock protection.
Supply and switching voltage 230 V.
In case of failure of the supply voltage, the switching state is maintained. The recurrent supply voltage is disconnected in a definite sequence. After plugging wait for short automatic synchronization before the switched consumer is plugged.
This wireless actuator features state-of-the-art hybrid technology that we developed: we combined the wear-free receiver and evaluation electronics and a bistable relay.
Apparent power is measured by the integrated current measurement from approx. 10 VA to 2300 VA when the contact is closed. A wireless telegram is transmitted into the Eltako wireless network within 30 seconds after switching on the load or after a change in power by min 5% and cyclically every 10 minutes.
Evaluation on the computer with Eltako Wireless Building Visualisation and Control Software GFVS or with energy consumption indicator FEA65D. GFVS-Energy supports up to 100 energy meters and GFVS 4.0 up to 250 energy meters.
Starting in production week 11/14, you can teach in encrypted sensors. You can switch on **bidirectional wireless** and/or a **repeater** function. Every change in state and incoming central command telegrams are then confirmed by a wireless telegram. This wireless telegram can be taught into other actuators, the software GFVS 3.0, and universal displays.
Up to 35 wireless pushbuttons are assigned **with the left button LRN,** either as a universal pushbutton, direction pushbutton or central pushbutton. For the control of extractor hoods or similar items up to 35 wireless window door contacts FTK or wireless Hoppe window handles can be taught-in. Several FTK or wireless Hoppe window handles are linked together.
If a FTK or wireless Hoppe window handle is taught-in, control commands of eventually taught-in pushbuttons are no longer running. It can be switched on and off manually **with the right button. The LED** performs during the teach-in process according to the operation manual. It shows wireless control commands by short flickering during operation.

FSVA-230V-10A	Wireless actuator Socket switching actuator with current measurement	EAN 4010312314555	**105,90 €/pc.**

WEEE-Reg.-Nr. DE 30298319

Technical Data Single-phase and Three-phase Energy Meters and Energy Consumption Indicator

	EVA12-32 A WSZ15D-32A MID WSZ15DE-32 A WZR12-32 A	WSZ15D-65 A MID	DSZ15D-3x80 A MID DSZ15DE-3x80 A DSZ15DM-3x80A MID DSZ14DRS-3x80A MID	DSZ15WD-3x5 A MID DSZ15WDM-3x5 A MID DSZ14WDRS-3x5 A MID
Rated voltage Extended range	230 V, 50 Hz -20 % / +15 %	230 V, 50 Hz -20 % / +15 %	3 x 230/400 V, 50 Hz -20 % / +15 %	3 x 230/400 V, 50 Hz -20 % / +15 %
Reference current I_{ref} (Limiting current I_{max})	5 (32) A	10 (65) A	3x10 (80) A	3x5(6) A
Internal consumption Active power	0.4 W EVA12, WZR12: 0.5 W	0.4 W	0.5 W per path DSZ14DRS: 0.8 W at L1	0.5 W per path DSZ14WDRS: 0.8 W at L1
Display	LC display 7 digits, therefrom 1 or 2 digits after the decimal point	LC display 7 digits, therefrom 1 or 2 digits after the decimal point	LC display 7 digits, therefrom 1 or 2 digits after the decimal point	LC display 7 digits, therefrom 1 digit after the decimal point
Display instantaneous values	WSZ15D: With a key you can select active power, voltage and current WSZ15DE: Active power displayed for 5 seconds every 30 seconds EVA12, WZR12: active power	With a key you can select active power, voltage and current	With a key you can select total active energy and active energy resettable, power, voltage and current per phase tariff 1 and tariff 2	With a key you can select total active energy and active energy resettable, power, voltage and current per phase
Accuracy class ±1%	B	B	B	B
Inrush current according to accuracy class B	20 mA	40 mA	40 mA	10 mA
Operating temperature	-25/+55°C EVA12, WZR12: -10/+55°C	-25/+55°C	-25/+55°C	-25/+55°C
Interface (not EVA12, WZR12)	DSZ15DM and DSZ15WDM with M-bus interface. DSZ14DRS and DSZ14WDRS with interface for Eltako RS485 bus. All else: Pulse interface S0 according to DIN EN 62053-31, potential free by opto-coupler, max. 30 V DC/20 mA and min. 5V DC. Impedance 100 ohms.			
	pulse length 30 ms	pulse length 30 ms	pulse length 30 ms	pulse length 30 ms
	2000 Imp./kWh	2000 Imp./kWh	1000 Imp./kWh	10 Imp./kWh
Terminal cover sealable	With sealing cap PK18. For the current path 1 sealing cap is required	With sealing cap PK18. For the current path 1 sealing cap is required	Terminal cover claps	Terminal cover claps
Protection degree	IP50 for mounting in distribution cabines with protection class IP51			
Maximum conductor cross section	6 mm² WSZ15D, WSZ15DE: L terminals 16 mm²	L terminals 16 mm², N and S0 terminals 6 mm²	N and L terminals 16 mm², S0, M-Bus and RS485 bus terminals 6 mm² DSZ15D/DE/DM-3x80A and DSZ14DRS-3x80A: L terminals 25 mm²	

The N terminal of three-phase energy meters must be connected, if not the electronics might be destroyed.

Compliance with: EN 50470

To comply with DIN VDE 0100-443 and DIN VDE 0100-534, a Type 2 or Type 3 surge protection device (SPD) must be installed.

Technical Data Single-phase Energy Meter for meter mounting installation

	WSZ60D-60A MID
Rated voltage Extended range	230 V, 50 Hz -10 % / +10 %
Reference current I_{ref} (Limiting current I_{max})	5 (60) A
Internal consumption Active power	0.5 W
Display	LC display 7 digits, therefrom 1 decimal digit
Accuracy class	A (± 2%)
Backstop	yes
Inrush current	10 mA
Number of tariffs	1
Operating temperature	-25/+70°C
Protection degree	IP51
Maximum conductor cross section	35 mm^2
Weight	1.3 kg
Dimensions	176 x 121 x 50 mm
EC type examination certificate	DE-07-MI003-PTB 015

Compliance with: EN 50470

To comply with DIN VDE 0100-443 and DIN VDE 0100-534, a Type 2 or Type 3 surge protection device (SPD) must be installed.

Measuring Instruments Directive MID

On 31.04.2004, the European Parliament and the Council adopted the European Measuring Instruments Directive (MID) 2004/22/EC.
The MID came into force in all member states of the EU and in Switzerland on 30.10.2006.
The 10 types of measuring instruments also include active electrical energy meters.

The MID replaces previous regulations on national approval and subsequent calibration in the domestic, trade and light industry sectors.

A manufacturer's Declaration of Conformity was produced based on this new directive.
There is a type examination certificate or pattern examination certificate for each type.

The MID regulates the following:

- the technical requirements (standard series DIN EN 50470-1/-3)
- the conformity assessment procedure
- the putting into use of measuring instruments
- marking the measuring instruments
- market surveillance

National law continues to regulate the following:

- recalibration
- calibration validity
- charges

When an MID instrument is put into use, we declare conformity with the MID in the operating instructions.
The number of the type examination certificate is also quoted there.

The device bears the MID conformity mark that consists of:

CE – M18 – 1383

- 1383 – Identification number of the notified body
- M18 – Metrology mark M + year of putting into use
- CE – CE mark

The year after the year of putting into use defines the recalibration time.
The period of calibration validity depends on the prevailing national law. In Germany, this is 8 years and can then be extended by a further 8 years by a state certified inspection body, i.e. not the manufacturer.

MID meters require no subsequent calibration with calibration mark. Instead, they are the equivalent of calibrated meters as a result of MID testing and an EU Declaration of Conformity from the manufacturer

Conventional installation

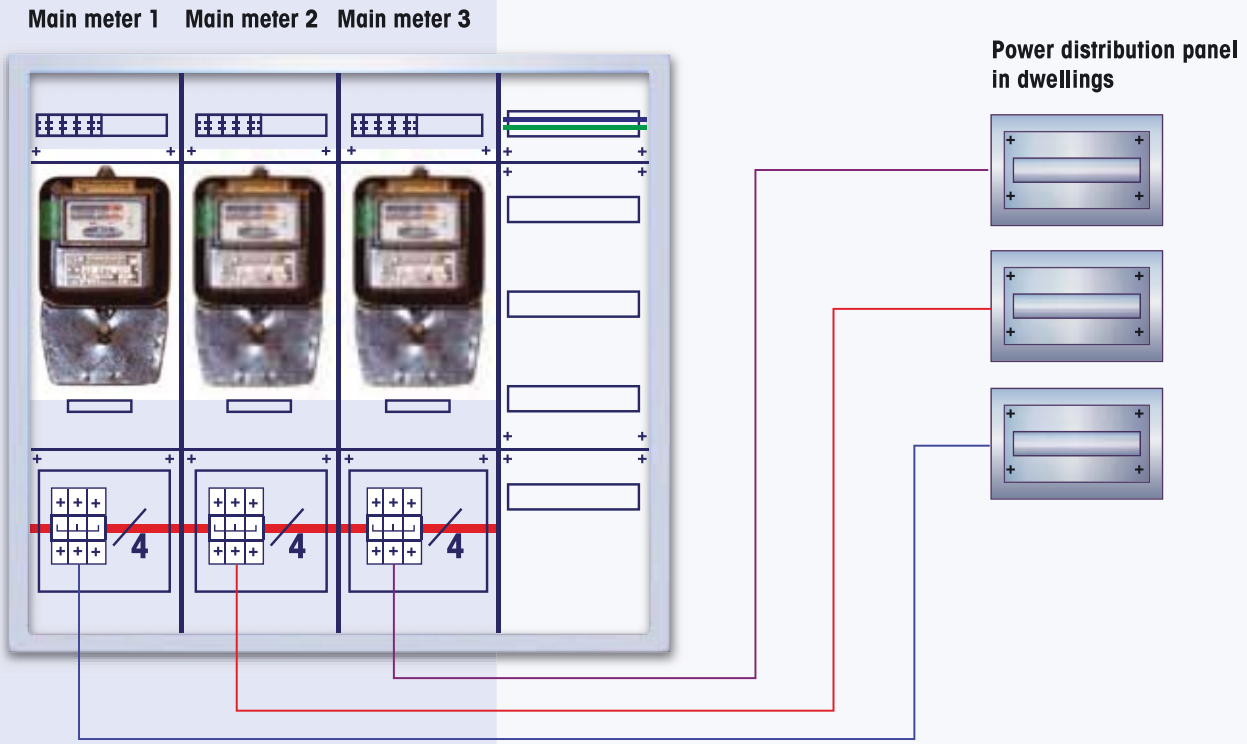

Modern installation acc. to TAB 2007

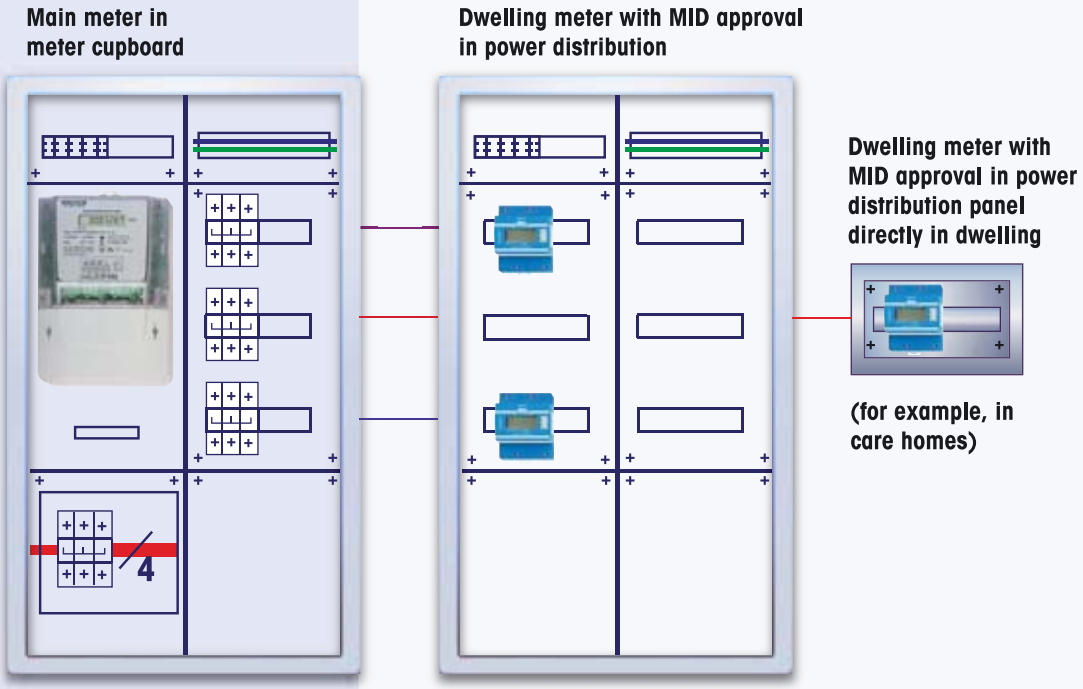

TAB | VDE

Technical support:

+49 176 135 825 14 thuente@eltako.de

Export Sales Manager:

+49 711 943 500 01 export@eltako.de

Eltako GmbH
Hofener Straße 54,
D-70736 Fellbach

+49 711 943 500 00
info@eltako.de eltako.com eltako-wireless.com tap-radio.com

enocean alliance Member

Picture credits: Cover, p. 6 © Massimo Cavallo – Fotolia.com; p. 2-3 © JiSign – Fotolia.com; p. 30 © Karin & Uwe Annas – Fotolia.com

09/2018